CE EMC REPORT

Prepared For :	012128 XXXXX
Product Name:	USB cable
Trade Mark:	N/A
Model :	JD2534
Additional Models:	JD2530, JD2531, JD2544, JD2523B
Prepared By :	Dongguan True Safety Testing Co., Ltd. Room 201, No.20, East of Houjie Avenue, Houjie, Dongguan, Guangdong, China
Test Date:	Feb. 17, 2023 To Feb. 21, 2023
Date of Report :	Feb. 21, 2023
Report No.:	TST20230280199-2ER

TABLE OF CONTENTS

TEST REPORT DECLARATION 5

1. TEST RESULTS SUMMARY 6

2. GENERAL INFORMATION 7

2.1. Report information 7

2.2. Measurement Uncertainty 7

3. PRODUCT DESCRIPTION 8

3.1. EUT Description 8

3.2. Block Diagram of EUT Configuration 8

3.3. Operating Condition of EUT 8

3.4. Test Conditions 8

3.5. Modifications 8

3.6. Abbreviations 9

3.7. Performance Criterion 9

4. TEST EQUIPMENT USED 10

4.1. For Conducted Emission Test 10

4.2. For Radiated Emission Measurement 10

4.3. For Harmonic / Flicker Test 10

4.4. For Electrostatic Discharge Immunity Test 10

4.5. For RF Strength Susceptibility Test 10

4.6. For Electrical Fast Transient/Burst Immunity Test 11

4.7. For Surge Test 11

4.8. For Injected Currents Susceptibility Test 11

4.9. For Magnetic Field Immunity Test 11

4.10. For Voltage Dips and Interruptions Test 11

5. POWER LINE CONDUCTED EMISSION TEST 12

5.1. Block Diagram of Test Setup 12

5.2. Test Standard 12

5.3. Power Line Conducted Emission Limit 12

5.4. EUT Configuration on Test 12

5.5. Operating Condition of EUT 13

5.6. Test Procedure 13

5.7. Test Result 13

6. RADIATED EMISSION TEST 14

6.1. Open Site Setup Diagram 14

6.2. Test Standard 14

6.3. Radiated Emission Limit 14

6.4. EUT Configuration on Test 14

6.5. Operating Condition of EUT 15

6.6. Test Procedure 15

6.7. Test Results 15

7. HARMONIC CURRENT EMISSION TEST 16

7.1. Block Diagram of Test Setup 16

7.2. Test Standard and Limit 16

7.3. Test Procedure 17

7.4. Test Results 17

8. VOLTAGE FLUCTUATIONS & FLICKER TEST 18

8.1. Block Diagram of Test Setup 18
8.2. Test Standard 18
8.3. Operating Condition of EUT 18
8.4. Test Results 18
9. ELECTROSTATIC DISCHARGE TEST 19
9.1. Block Diagram of ESD Test Setup 19
9.2. Test Standard 19
9.3. Severity Levels and Performance Criterion 19
9.4. EUT Configuration on Test 20
9.5. Operating Condition of EUT 20
9.6. Test Procedure 20
9.7. Test Results 21
10. RF FIELD STRENGTH SUSCEPTIBILITY TEST 23
10.1. R/S Test Setup 23
10.2. Test Standard 23
10.3. Severity Levels and Performance Criterion 23
10.4. EUT Configuration on Test 23
10.5. Operating Condition of EUT 24
10.6. Test Procedure 24
10.7. Test Results 24
11. ELECTRICAL FAST TRANSIENT/BURST TEST 26
11.1. EFT Test Setup 26
11.2. Test Standard 26
11.3. Severity Levels and Performance Criterion 26
11.4. EUT Configuration on Test 26
11.5. Operating Condition of EUT 27
11.6. Test Procedure 27
11.7. Test Results 27
12. SURGE TEST 29
12.1. Surge Test Setup 29
12.2. Test Standard 29
12.3. Severity Levels and Performance Criterion 29
12.4. EUT Configuration on Test 29
12.5. Operating Condition of EUT 29
12.6. Test Procedure 30
12.7. Test Results 30
13. INJECTED CURRENTS SUSCEPTIBILITY TEST 32
13.1. Block Diagram of Test AC Mains Setup 32
13.2. Test Standard 32
13.3. Severity Levels and Performance Criterion 32
13.4. EUT Configuration on Test 32
13.5. Operating Condition of EUT 32
13.6. Test Procedure 33
13.7. Test Results 33
14. MAGNETIC FIELD IMMUNITY TEST 35
14.1. Block Diagram of Test Setup 35
14.2. Test Standard 35
14.3. Severity Levels and Performance Criterion 35
14.4. EUT Configuration on Test 35
14.5. Operating Condition of EUT 36

14.6. Test Procedure 36
14.7. Test Results 36
15. VOLTAGE DIPS AND INTERRUPTIONS TEST 38
15.1. Voltage Dips and Interruptions Test Setup 38
15.2. Test Standard 38
15.3. Severity Levels and Performance Criterion 38
15.4. EUT Configuration on Test 38
15.5. Operating Condition of EUT 38
15.6. Test Procedure 39
15.7. Test Result 39
APPENDIX I 41
APPENDIX II 44

TEST REPORT DECLARATION

Applicant	:	012128
Address	:	XXXXX
Manufacturer	:	012128
Address	:	XXXXX
EUT Description	:	USB cable
Model Number	:	JD2534
Rating	:	DC 5V 2A 10W

Test Standards:
EN 55032:2015+A11:2020
EN IEC 61000-3-2:2019+A1:2021
EN 61000-3-3:2013+A1:2019
EN 55035:2017+A11:2020 (EN 61000-4-2:2009, EN 61000-4-3:2006+A2:2010, EN 61000-4-4:2012, EN 61000-4-5:2014, EN IEC 61000-4-6:2019, EN 61000-4-8:2010, EN IEC 61000-4-11:2020)

The EUT described above is tested by Dongguan True Safety Testing Co., Ltd. EMC Laboratory to determine the maximum emissions from the EUT and ensure the EUT to be compliance with the immunity requirements of the EUT. Dongguan True Safety Testing Co., Ltd. EMC Laboratory is assumed full responsibility for the accuracy of the test results. Also, this report shows that the EUT technically complies with the 2014/30/EU directive and its amendment requirements.
The test report is valid for above tested sample only and shall not be reproduced in part without written approval of the laboratory.

Tested by: Sgan
Test Engineer

Reviewer : Tony. Wan
Supervisor

Approved & Authorized Signer : Andy
Andy/Manager

Dongguan True Safety Testing Co., Ltd. Approve

1. TEST RESULTS SUMMARY

Table 1 Test Results Summary

Test Items	Test Results
Radiated Emission	PASS
Conducted Disturbance	N/A
Harmonic Current	N/A
Voltage Fluctuation and Flicker	N/A
Electrostatic Discharge Immunity	PASS
Radiated Electromagnetic Fields Immunity	PASS
Electric Fast Transient Burst Immunity	N/A
Surge Immunity	N/A
Injected currents susceptibility test	N/A
Magnetic Field Immunity Test	PASS
Voltage dips and interruptions Immunity	N/A

2. GENERAL INFORMATION

2.1.Report information

2.1.1.This report is not a certificate of quality; it only applies to the sample of the specific product/equipment given at the time of its testing. The results are not used to indicate or imply that they are application to the similar items. In addition, such results must not be used to indicate or imply that TST approves recommends or endorses the manufacture, supplier or use of such product/equipment, or that TST in any way guarantees the later performance of the product/equipment.

2.1.2.The sample/s mentioned in this report is/are supplied by Applicant, TST therefore assumes no responsibility for the accuracy of information on the brand name, model number, origin of manufacture or any information supplied.

2.1.3.Additional copies of the report are available to the Applicant at an additional fee. No third part can obtain a copy of this report through TST, unless the applicant has authorized TST in writing to do so.

2.2.Measurement Uncertainty

Available upon request.

3. PRODUCT DESCRIPTION

3.1.EUT Description

Applicant	:	012128
Address	:	XXXXX
Manufacturer	:	012128
Address	:	XXXXX
EUT Description	:	USB cable
Model Number	:	JD2534

3.2.Block Diagram of EUT Configuration

3.3.Operating Condition of EUT

Test mode 1: ON

3.4.Test Conditions

Temperature: 23-26℃
Relative Humidity: 55-68 %

3.5.Modifications

No modification was made.

3.6.Abbreviations

AC	Alternating Current
AMN	Artificial Mains Network
DC	Direct Current
EM	ElectroMagnetic
EMC	ElectroMagnetic Compatibility
EUT	Equipment Under Test
IF	Intermediate Frequency
RF	Radio Frequency
rms	root mean square
EMI	Electromagnetic Interference
EMS	Electromagnetic Susceptibility

3.7.Performance Criterion

Criterion A: The equipment shall continue to operate as intended without operator intervention. No degradation of performance of loss of function is allowed below a performance Level specified by the manufacturer when the equipment is used as intended.

Criterion B: After the test, the equipment shall continue to operate as intended without operator intervention. No degradation of performance or loss of function is allowed, after the application of the phenomena below a performance level specified by the manufacturer, when the equipment is used as intended.

Criterion C: Loss of function is allowed, provided the function is self-recoverable, or can be restored by the operation of the controls by the user in accordance with the manufacturer's instructions.

4. T EQUIPMENT USED

4.1.For Conducted Emission Test

Item	Equipment	Manufacturer	Model No.	Serial No.	Last Cal.	Cal. Interval
1.	Test Receiver	Rohde & Schwarz	ESHS30	828985/018	Apr. 11, 23	1 Year
2.	Pulse Limiter	Rohde & Schwarz	ESH3-Z2	100006	Apr. 11, 23	1 Year
3.	L.I.S.N.	Rohde & Schwarz	ESH2-Z5	834549/005	Apr. 11, 23	1 Year
4.	Conical	Emtek	N/A	N/A	N/A	N/A
5.	Voltage Probe	Schwarzbeck	TK9416	N/A	Apr. 11, 23	1 Year
6.	Coaxial Switch	Anritsu	MP59B	6100214550	Apr. 11, 23	1 Year

4.2.For Radiated Emission Measurement

Item	Equipment	Manufacturer	Model No.	Serial No.	Last Cal.	Cal. Interval
1.	Spectrum Analyzer	ANRITSU	MS2661C	6200140915	Apr. 11, 23	1 Year
2.	Test Receiver	Rohde&Schwarz	ESC830	828982/018	Apr. 11, 23	1 Year
3.	Bilog Antenna	Schwarzbeck	VULB9163	142	Apr. 11, 23	1 Year
4.	50 Coaxial Switch	Anritsu Corp	MP59B	6100237248	Apr. 11, 23	1 Year
5.	Cable	Schwarzbeck	AK9513	ACRX1	Apr. 11, 23	1 Year
6.	Cable	Rosenberger	N/A	FR2RX2	Apr. 11, 23	1 Year
7.	Cable	Schwarzbeck	AK9513	CRRX2	Apr. 11, 23	1 Year
8.	Cable	Schwarzbeck	AK9513	CRRX2	Apr. 11, 23	1 Year
9.	Signal Generator	HP	864A	3625U00573	Apr. 11, 23	1 Year

4.3.For Harmonic / Flicker Test

Item	Equipment	Manufacturer	Model No.	Serial No.	Last Cal.	Cal. Interval
1.	Power Frequency test system	HAEFELY	PHF555	080419-03	Apr. 11, 23	1 Year

4.4.For Electrostatic Discharge Immunity Test

Item	Equipment	Manufacturer	Model No.	Serial No.	Last Cal.	Cal. Interval
1.	ESD Tester	HAEFELY	Noiseken	H911’292	Apr. 11, 23	1 Year

4.5.For RF Strength Susceptibility Test

Item	Equipment	Manufacturer	Model No.	Serial No.	Last Cal.	Cal. Interval
1.	Signal Generator	HP	8648A	3633A02081	Apr. 11, 23	1 Year
2.	Amplifier	A&R	500A100	17034	NCR	NCR
3.	Amplifier	A&R	100W/1000M1	17028	NCR	NCR
4.	Isotropic Field Monitor	A&R	FM2000	16829	NCR	NCR
5.	Isotropic Field Probe	A&R	FLW220100	16755	Apr. 11, 23	1 Year
6.	Biconic Antenna	EMCO	3108	9507-2534	NCR	NCR
7.	Log-periodic Antenna	A&R	AT1080	16812	NCR	NCR
8.	PC	N/A	486DX2	N/A	N/A	N/A

4.6.For Electrical Fast Transient/Burst Immunity Test

Item	Equipment	Manufacturer	Model No.	Serial No.	Last Cal.	Cal. Interval
1.	Burst Tester	HAEFELY	PEFT 4010	080981-16	Apr. 11, 23	1 Year

4.7.For Surge Test

Item	Equipment	Manufacturer	Model No.	Serial No.	Last Cal.	Cal. Interval
1.	Surge Tester	HAEFELY	PSURGE4.1	080107-04	Apr. 11, 23	1 Year

4.8.For Injected Currents Susceptibility Test

Item	Equipment	Manufacturer	Model No.	Serial No.	Last Cal.	Cal. Interval
1.	Simulator	EMTEST	CWS 500C	0900-12	Apr. 11, 23	1 Year
2.	CDN	EMTEST	CDN-M2	510010010010	Apr. 11, 23	1 Year
3.	VDN	EMTEST	CDN-M3	0900-11	Apr. 11, 23	1 Year
4.	Injection Clamp	EMTEST	F-2031-23MM	368	Apr. 11, 23	1 Year
5.	Attenuator	EMTEST	ATT6	0010222a	Apr. 11, 23	1 Year

4.9.For Magnetic Field Immunity Test

Item	Equipment	Manufacturer	Model No.	Serial No.	Last Cal.	Cal. Interval
1.	Magnetic Field Tester	HEAFELY	MAG100.1	083858-10	Apr. 11, 23	1 Year

4.10.For Voltage Dips and Interruptions Test

Item	Equipment	Manufacturer	Model No.	Serial No.	Last Cal.	Cal. Interval
2.	Dips Tester	HEAFELY	PLINE 1610	083732-18	Apr. 11, 23	1 Year

5. POWER LINE CONDUCTED EMISSION TEST

5.1.Block Diagram of Test Setup

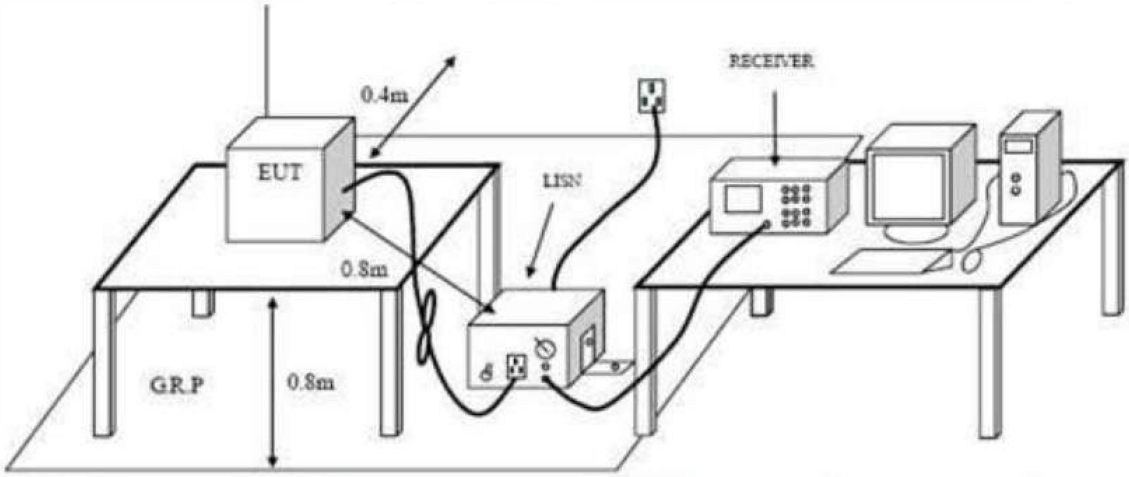

5.2.Test Standard

EN 55032:2015+A11:2020

5.3.Power Line Conducted Emission Limit

Frequency MHz	Limits dB(μV)	
	Quasi-peak Level	Average Level
0.15 ~ 0.50	66 ~ 56*	56 ~ 46*
0.50 ~ 5.00	56	46
5.00 ~ 30.00	60	50

Notes: 1. *Decreasing linearly with logarithm of frequency.
2. The lower limit shall apply at the transition frequencies.

5.4.EUT Configuration on Test

The following equipments are installed on conducted emission test to meet EN 55032 requirement and operating in a manner, which tends to maximize its emission characteristics in a normal application.

5.4.1.EUT Information

Model Number : JD2534
Serial Number : JD2530, JD2531, JD2544, JD2523B
Manufacturer : 012128

5.5.Operating Condition of EUT

5.5.1.Setup the EUT and simulators as shown in Section 5.1.

5.5.2.Turn on the power of all equipments.

5.5.3.Let the EUT work in test modes (ON) and test it.

5.6.Test Procedure

The EUT is put on the ground and connected to the AC mains through a Artificial Mains Network (AMN). This provided 50ohm-coupling impedance for the tested equipments. Both sides of AC line are checked to find out the maximum conducted emission Levels according to the EN 55032 regulations during conducted emission test.

The bandwidth of the test receiver (R&S Test Receiver ESHS30) is set at 10KHz.

The frequency range from 150 KHz to 30 MHz is investigated.

5.7.Test Result

N/A

6. RADIATED EMISSION TEST

6.1.Open Site Setup Diagram

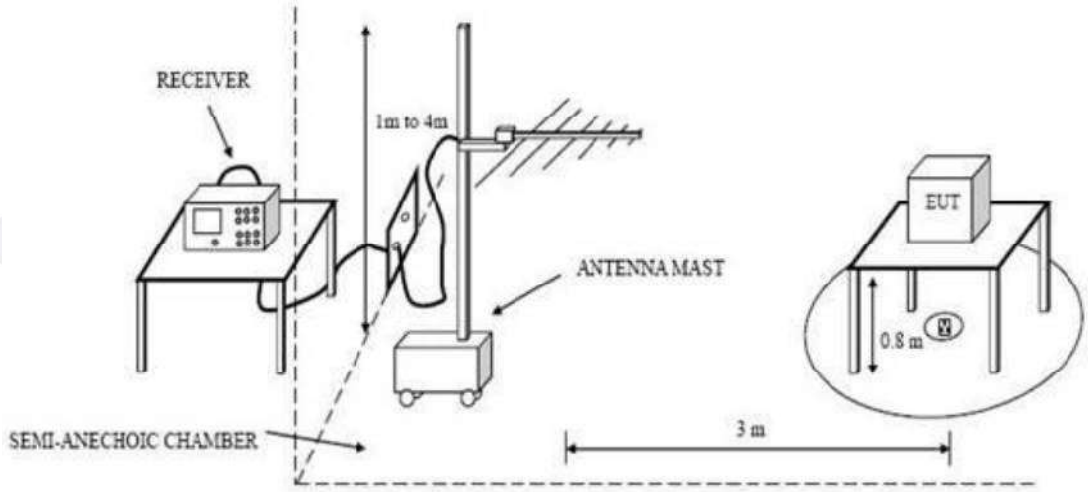

6.2.Test Standard

EN 55032:2015+A11:2020

6.3.Radiated Emission Limit

All emanations from a Class B computing devices or system, including any network of conductors and apparatus connected thereto, shall not exceed the Level of field strengths specified below:

FREQUENCY (MHz)	DISTANCE (Meters)	FIELD STRENGTHS LIMITS (dBμV/m)
30 ~ 230	3	40
230 ~ 1000	3	47

Note:(1) The tighter limit shall apply at the edge between two frequency bands.
(2) Distance refers to the distance in meters between the measuring instruments antenna and the closed point of any part of the EUT.

6.4.EUT Configuration on Test

The EN 55032 Class B regulations test method must be used to find the maximum emission during radiated emission test.

6.5.Operating Condition of EUT

6.5.1.Setup the EUT as shown on Section 6.1.

6.5.2.Turn on the power of all equipments.

6.5.3.Let the EUT work in test mode and measure it.

6.6.Test Procedure

The EUT is placed on a turn table which is 0.8 meter above ground. The turn table can rotate 360 degrees to determine the position of the maximum emission Level. The EUT is set 3 meters away from the receiving antenna which is mounted on a antenna tower. The antenna can move up and down between 1 to 4 meters to find out the maximum emission Level. Broadband antenna (calibrated by dipole antenna) are used as a receiving antenna. Both horizontal and vertical polarization of the antenna are set on test.
The bandwidth setting on the test receiver (R&S TEST RECEIVER ESCS20) is 120 KHz.
The EUT is tested in Semi-Anechoic Chamber. and all the scanning waveform is put in **Appendix I.**

6.7.Test Results

PASS.

7. HARMONIC CURRENT EMISSION TEST

7.1.Block Diagram of Test Setup

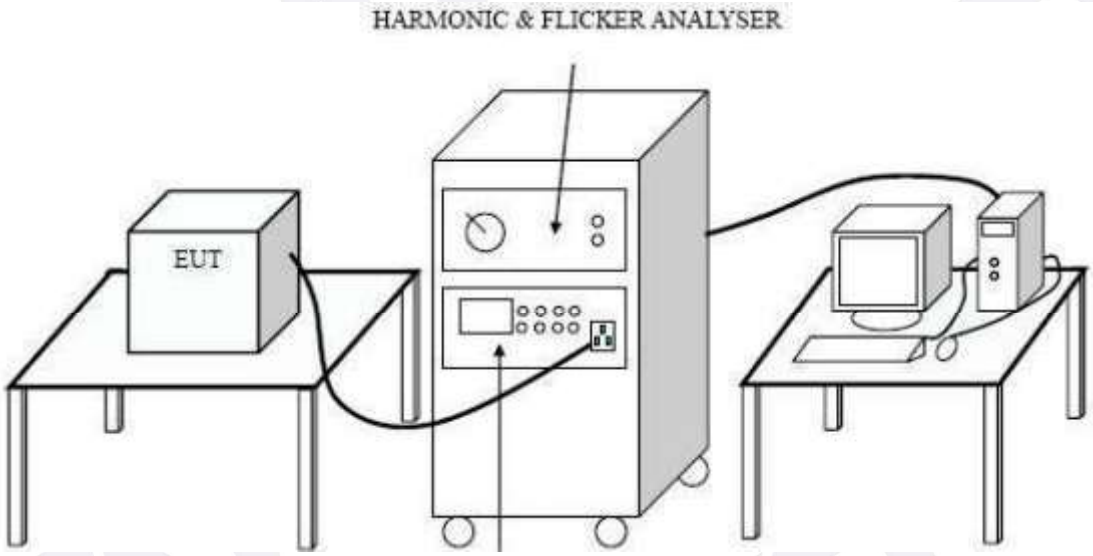

7.2.Test Standard and Limit

7.2.1.Test Standard

EN IEC 61000-3-2:2019+A1:2021

7.2.2.Limits

Table 12 Harmonic Current Test Limit (Class A)

Harmonic order (**n**)	Maximum permissible harmonic current (A)
Odd harmonics	
3	2.30
5	1.14
7	0.77
9	0.40
11	0.33
13	0.21
15≤n≤39	0.15×15/**n**
Even harmonics	
2	1.08
4	0.43
6	0.30
8≤n≤40	0.23×8/**n**

7.3. Test Procedure

The power cord of the EUT is connected to the output of the test system. Turn on the Power of the EUT and use the test system to test the harmonic current Level.

7.4. Test Results

N/A

8. VOLTAGE FLUCTUATIONS & FLICKER TEST

8.1.Block Diagram of Test Setup

Same as Section 7.1..

8.2.Test Standard

EN 61000-3-3:2013+A1:2019

8.3.Operating Condition of EUT

Same as Section7.3.. The power cord of the EUT is connected to the output of the test system. Turn on the power of the EUT and use the test system to test the harmonic current Level.

Flicker Test Limit

Test items	Limits
Pst	1.0
dc	3.3%
dmax	4.0%
dt	Not exceed 3.3% for 500ms

8.4.Test Results

N/A

9. ELECTROSTATIC DISCHARGE TEST

9.1.Block Diagram of ESD Test Setup

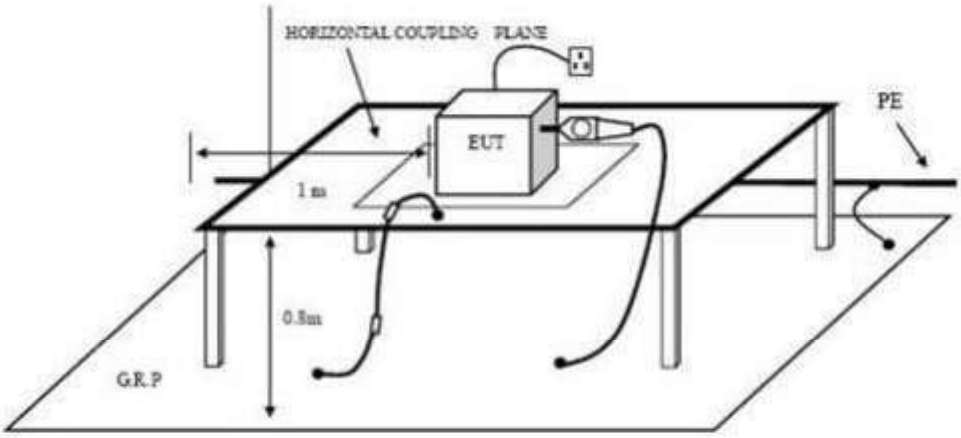

DIRECT DISCHARGE SETUP

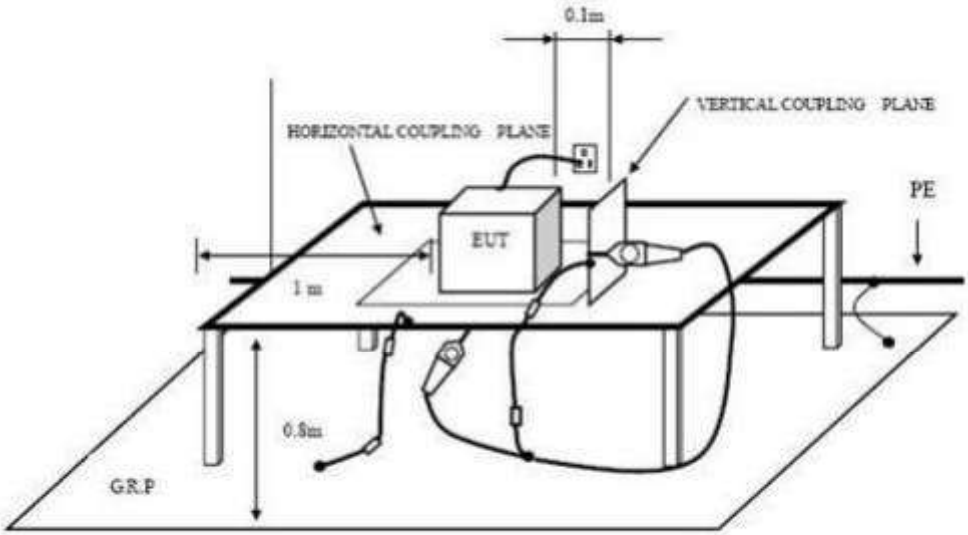

INDIRECT DISCHARGE SETUP

9.2.Test Standard

EN 55035:2017+A11:2020 (EN 61000-4-2:2018)
Severity Level 3 for Air Discharge at 8KV
Severity Level 2 for Contact Discharge at 4KV

9.3.Severity Levels and Performance Criterion

9.3.1.Severity Level

Level	Test Voltage Contact Discharge (KV)	Test Voltage Air Discharge (KV)
1.	2	2
2.	4	4
3.	6	8
4.	8	15
X.	Special	Special

9.3.2.Performance criterion: B

9.4.EUT Configuration on Test

The configuration of EUT are listed in Section 5.4

9.5.Operating Condition of EUT

9.5.1.Setup the EUT as shown in Section 9.1.

9.5.2.Turn on the power of all equipments.

9.5.3.Let the EUT work in test mode (ON) and test it.

9.6.Test Procedure

9.6.1.Air Discharge:

This test is done on a non-conductive surfaces. The round discharge tip of the discharge electrode shall be approached as fast as possible to touch the EUT.
After each discharge, the discharge electrode shall be removed from the EUT.
The generator is then re-triggered for a new single discharge and repeated 10 times for each pre-selected test point. This procedure shall be repeated until all the air discharge completed.

9.6.2.Contact Discharge:

All the procedure shall be same as Section 9.6.1. except that the tip of the discharge electrode shall touch the EUT before the discharge switch is operated.

9.6.3.Indirect discharge for horizontal coupling plane

At least 20 single discharges shall be applied to the horizontal coupling plane, at points on each side of the EUT. The discharge electrode positions vertically at a distance of 0.1m from the EUT and with the discharge electrode touching the coupling plane.

9.6.4.Indirect discharge for vertical coupling plane

At least 20 single discharge shall be applied to the center of one vertical edge of the coupling plane. The coupling plane, of dimensions 0.5m X 0.5m, is placed parallel to, and positioned at a distance of 0.1m from the EUT. Discharges shall be applied to the coupling plane, with

this plane in sufficient different positions that the four faces of the EUT are completely illuminated.

9.7. Test Results

PASS.

Please refer to the following page.

Electrostatic Discharge Test Results

Dongguan True Safety Testing Co., Ltd.

Applicant	*: 012128*	*Test Date*	*: Feb. 20, 2023*
EUT	*: USB cable*	*Temperature*	*: 25 ℃*
M/N	*: JD2534*	*Humidity*	*: 53 %*
Power Supply	*: DC 5V*	*Test Mode*	*: ON*

Air Discharge: ±10KV *For each point positive 10 times and negative 10 times discharge.*

Contact Discharge: ±6KV

Location	***Kind*** *A-Air Discharge* *C-Contact Discharge*	***Result***
Port	*C*	*PASS*
HCP	*C*	*PASS*
VCP	*C*	*PASS*

10. RF FIELD STRENGTH SUSCEPTIBILITY TEST

10.1.R/S Test Setup

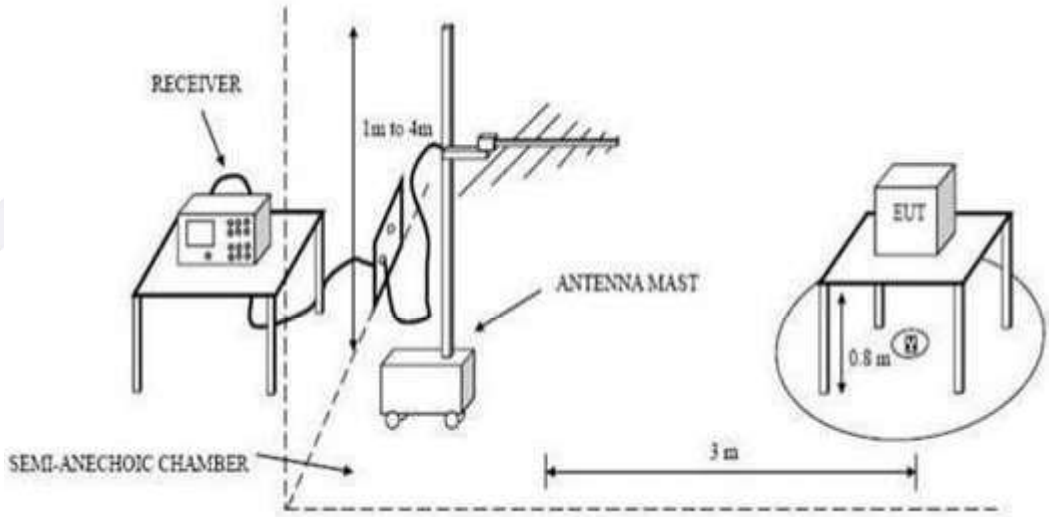

10.2.Test Standard

EN 55035:2017+A11:2020 (EN IEC 61000-4-3:2020)

Severity Level 2 at 3V / m

10.3.Severity Levels and Performance Criterion

10.3.1.Severity Level

Level	Field Strength V/m
1.	1
2.	3
3.	10
X.	Special

10.3.2.Performance criterion : A

10.4.EUT Configuration on Test

The configuration of EUT are listed in Section 5.4

10.5.Operating Condition of EUT

Setup the EUT as shown in Section 10.1.. The operating condition of EUT are listed in section 3.3.

10.6.Test Procedure

The EUT and its simulators are placed on a turn table which is 0.8 meter above the ground. The EUT is set 3 meters away from the transmitting antenna which is mounted on an antenna tower. Both horizontal and vertical polarization of the antenna are set on test. Each of the four sides of EUT must be faced this transmitting antenna and measured individually.
In order to judge the EUT performance, a CCD camera is used to monitor the EUT.
All the scanning conditions are as follows **:**

Condition of Test	Remarks
1. Fielded Strength	3 V/m (Severity Level 2)
2. Radiated Signal	Modulated
3. Scanning Frequency	80 - 1000 MHz, 1.4 - 2.7 GHz
4. Sweeping time of radiated	0.0015 decade/s
5. Dwell Time	1 Sec.

10.7.Test Results

PASS.

Please refer to the following page.

RF Field Strength Susceptibility Test Results

Dongguan True Safety Testing Co., Ltd.

Applicant	: 012128	Test Date	: Feb. 20, 2023
EUT	: USB cable	Temperature	: 25 ℃
M/N	: JD2534	Humidity	: 53 %
Power Supply	: DC 5V	Test Mode	: ON
		Frequency Range :	80 MHz to 1000 MHz 1.4 GHz to 2.7 GHz

Modulation: ☑ AM ☐ Pulse ☐ none 1 KHz 80%

Criterion : A

	Frequency Rang : 80 MHz to 1000 MHz，1.4 GHz to 2.7 GHz	
Steps	1%	1%
	Horizontal	Vertical
Front	Pass	Pass
Right	Pass	Pass
Rear	Pass	Pass
Left	Pass	Pass

11. ELECTRICAL FAST TRANSIENT/BURST TEST

11.1. EFT Test Setup

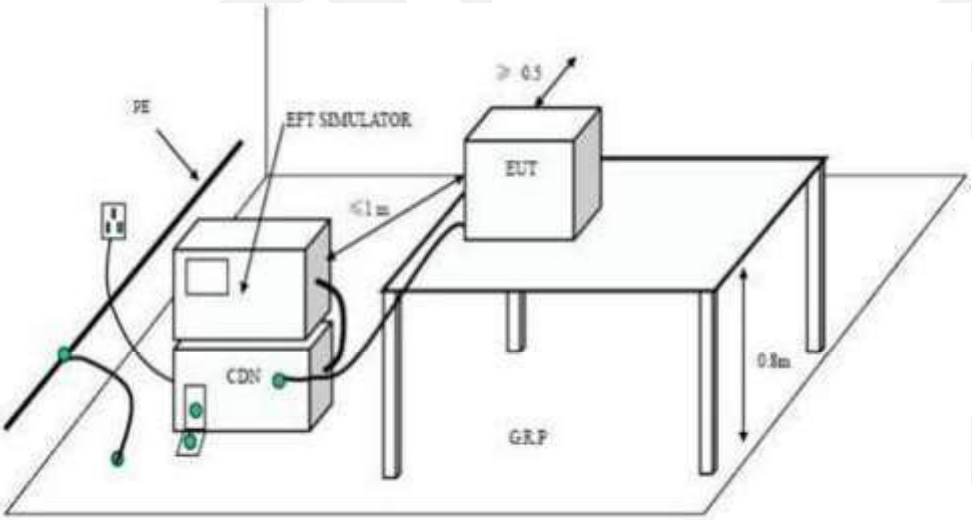

11.2. Test Standard

EN 55035:2017+A11:2020(EN 61000-4-4:2012)

Severity Level 2 at 1KV

11.3. Severity Levels and Performance Criterion

11.3.1. Severity Level

Open Circuit Output Test Voltage ±10%		
Level	On Power Supply Lines	On I/O (Input/Output) Signal data and control lines
1.	0.5 KV	0.25 KV
2.	1 KV	0.5 KV
3.	2 KV	1 KV
4.	4 KV	2 KV
X	Special	Special

11.3.2. Performance criterion : B

11.4. EUT Configuration on Test

The configuration of EUT are listed in Section 5.4.

11.5.Operating Condition of EUT

Setup the EUT as shown in Section 11.1.. The operating condition of EUT are listed in section 3.3.

11.6.Test Procedure

The EUT is put on the table which is 0.8 meter high above the ground. This reference ground plane shall project beyond the EUT by at least 0.1m on all sides and the minimum distance between the EUT and all other conductive structure, except the ground plane beneath the EUT, shall be more than 0.5m.

11.6.1.For input and output AC power ports:

The EUT is connected to the power mains by using a coupling device which couples the EFT interference signal to AC power lines. Both polarities of the test voltage should be applied during compliance test and the duration of the test is 2 mins.

11.6.2.For signal lines and control lines ports:

It’s unnecessary to test.

11.6.3.For DC output line ports:

It’s unnecessary to test.

11.7.Test Results

N/A

Electrical Fast Transient/Burst Test Results

Dongguan True Safety Testing Co., Ltd.

Applicant :	*012128*	*Test Date :*	*Feb. 20, 2023*
EUT :	*USB cable*	*Temperature :*	*25 ℃*
M/N :	*JD2534*	*Humidity :*	*53 %*
Power Supply :	*DC 5V*	*Test Mode :*	*ON*

Inject Place : AC Mains

Inject Line	*Voltage KV*	*Inject Time(s)*	*Inject Method*	*Results*	*Inject Line*	*Voltage KV*	*Inject Time(s)*	*Inject Method*	*Results*
L	*±1*	*120*	*Direct*	*--*					
N	*±1*	*120*	*Direct*	*--*					
L N	*±1*	*120*	*Direct*	*--*					

12.SURGE TEST

12.1.Surge Test Setup

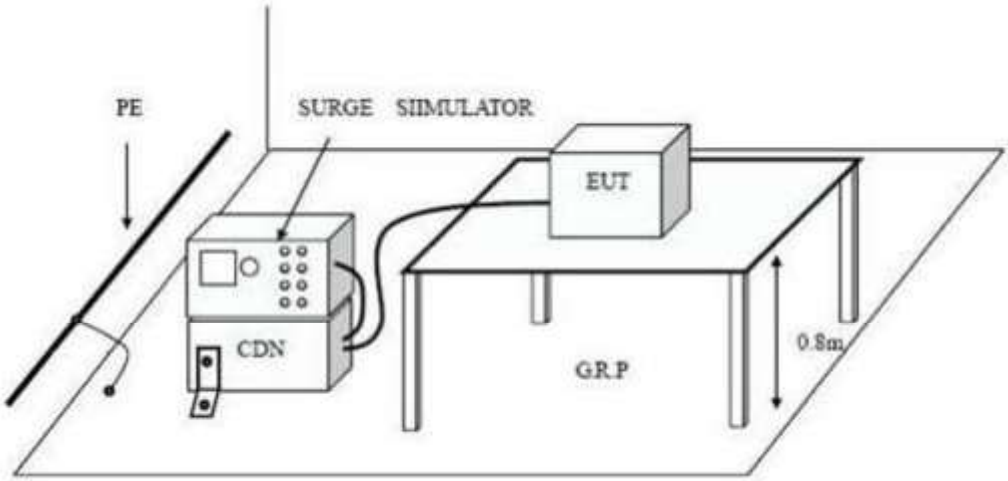

12.2.Test Standard

EN 55035:2017+A11:2020 (EN 61000-4-5:2014+A1:2017)
Severity Level 2 for Line to Neutral at 1.0KV

12.3.Severity Levels and Performance Criterion

12.3.1.Severity Level

Severity Level	Open-Circuit Test Voltage KV
1	0.5
2	1.0
3	2.0
4	4.0
*	Special

Performance criterion **: B**

12.4.EUT Configuration on Test

The configuration of EUT are listed in Section 5.4

12.5.Operating Condition of EUT

12.5.1.Setup the EUT as shown in Section 12.1..

12.5.2.Turn on the power of all equipments.

12.5.3.Let the EUT work in test mode (ON) and test it.

12.6.Test Procedure

1) Setup the EUT and test generator as shown on Section 12.1.
2) For line to line coupling mode, provide a 0.5KV 1.2/50us voltage surge (at open-circuit condition) and 8/20us current surge to EUT selected points.
3) At least 5 positive and 5 negative (polarity) tests with a maximum 1/min repetition rate are conducted during test.
4) Different phase angles are done individually.
5) Record the EUT operating situation during compliance test and decide the EUT immunity criterion for above each test.

12.7.Test Results

N/A

Surge Immunity Test Results

Dongguan True Safety Testing Co., Ltd.

Applicant	: *012128*	*Test Date*	: *Feb. 20, 2023*
EUT	: *USB cable*	*Temperature*	: *25 ℃*
M/N	: *JD2534*	*Humidity*	: *53 %*
Power Supply	: *DC 5V*	*Test Mode*	: *ON*

Location	*Polarity*	*Phase Angle*	*No of Pulse*	*Pulse Voltage (KV)*	*Result*
L-N, L-PE, N-PE	+	*0*	*5*	*1.0*	--
	+	*90*	*5*	*1.0*	--
	+	*180*	*5*	*1.0*	--
	+	*270*	*5*	*1.0*	--
	-	*0*	*5*	*1.0*	--
	-	*90*	*5*	*1.0*	--
	-	*180*	*5*	*1.0*	--
	-	*270*	*5*	*1.0*	--

13. INJECTED CURRENTS SUSCEPTIBILITY TEST

13.1. Block Diagram of Test AC Mains Setup

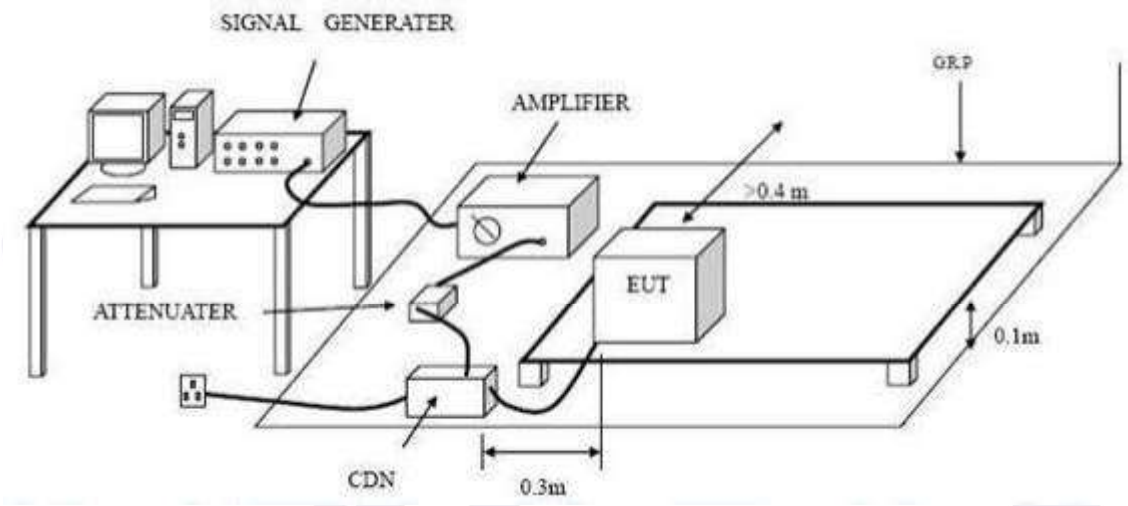

13.2. Test Standard

EN 55035:2017+A11:2020 (EN IEC 61000-4-6:2019)

Severity Level 2 at 3 V (rms), 0.15MHz ~ 80MHz

13.3. Severity Levels and Performance Criterion

13.3.1. Severity Level

Level	Field Strength V/m
1.	1
2.	3
3.	10
X	Special

13.3.2. Performance criterion: A

13.4. EUT Configuration on Test

The configuration of EUT are listed in Section 5.4

13.5. Operating Condition of EUT

Setup the EUT as shown in Section 13.1.. The operating condition of EUT are listed in section 3.3

13.6.Test Procedure

1) Set up the EUT, CDN and test generators as shown on Section 13.1.
2) Let the EUT work in test mode and test it.
3) The EUT are placed on an insulating support 0.8m high above a ground reference plane. CDN (coupling and decoupling device) is placed on the ground plane about 0.3m from EUT. Cables between CDN and EUT are as short as possible, and their height above the ground reference plane shall be between 30 and 50 mm (where possible).
4) The disturbance signal described below is injected to EUT through CDN.
5) The EUT operates within its operational mode(s) under intended climatic conditions after power on.
6) The frequency range is swept from 150KHz to 80MHz using 3V signal level, and with the disturbance signal 80% amplitude modulated with a 1KHz sine wave.
7) The rate of sweep shall not exceed $1.5*10^{-3}$decades/s. Where the frequency is swept incrementally, the step size shall not exceed 1% of the start and thereafter 1% of the preceding frequency value.
8) Recording the EUT operating situation during compliance testing and decide the EUT immunity criterion.

13.7.Test Results

N/A

Injected Currents Susceptibility Test Results

Dongguan True Safety Testing Co., Ltd.

Applicant	: *012128*	*Test Date*	: *Feb. 20, 2023*
EUT	: *USB cable*	*Temperature*	: *25 ℃*
M/N	: *JD2534*	*Humidity*	: *53 %*
Power Supply	: *DC 5V*	*Test Mode*	: *ON*

Frequency Range (MHz)	*Injected Position*	*Strength*	*Criterion*	*Result*
0.15 ~ 20	*AC Line*	*3V(rms), Unmodulated*	*A*	--
20 ~ 80	*AC Line*	*3V(rms), Unmodulated*	*A*	--

14. MAGNETIC FIELD IMMUNITY TEST

14.1. Block Diagram of Test Setup

14.1.1. Block Diagram of the EUT

14.1.2. Block Diagram of Test Setup

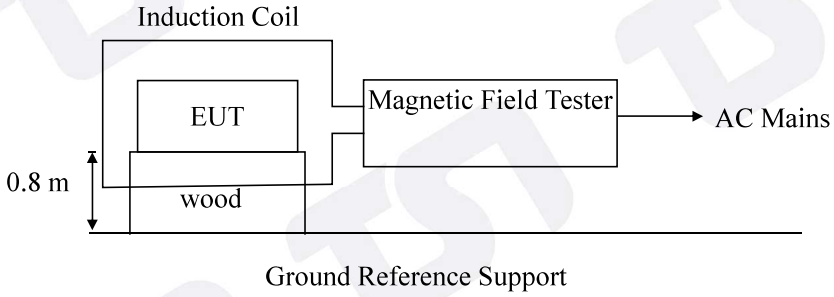

14.2. Test Standard

EN 55035:2017+A11:2020 (EN 61000-4-8:2010)
Severity Level 1 at 1A/m

14.3. Severity Levels and Performance Criterion

14.3.1. Severity Level

Level	Magnetic Field Strength A/m
1.	1
2.	3
3.	10
4.	30
5.	100
X.	Special

14.3.2. Performance criterion : A

14.4. EUT Configuration on Test

The configuration of EUT are listed in Section 5.4

14.5.Operating Condition of EUT

14.5.1.Setup the EUT as shown in Section 14.1

14.5.2.Turn on the power of all equipments.

14.5.3.Let the EUT work in test mode (ON) and test it.

14.6.Test Procedure

The EUT shall be subjected to the test magnetic field by using the induction coil of standard dimensions (1m*1m) and shown in Section 14.1. The induction coil shall then be rotated by 90° in order to expose the EUT to the test field with different orientations.

14.7.Test Results

PASS.

Please refer to the following page.

Magnetic Field Immunity Test Results

Dongguan True Safety Testing Co., Ltd.

Applicant :	*012128*	*Test Date :*	*Feb. 20, 2023*
EUT :	*USB cable*	*Temperature :*	*25 ℃*
M/N :	*JD2534*	*Humidity :*	*53 %*
Power Supply :	*DC 5V*	*Test Mode :*	*ON*

Test Level	*Testing Duration*	*Coil Orientation*	*Criterion*	*Result*
1A/M	*5 mins*	*Horizontal*	*A*	*PASS*
1A/M	*5 mins*	*Vertical*	*A*	*PASS*

Remark:	*Test Equipment :* *Magnetic Field Tester MAG100.1*

15. VOLTAGE DIPS AND INTERRUPTIONS TEST

15.1. Voltage Dips and Interruptions Test Setup

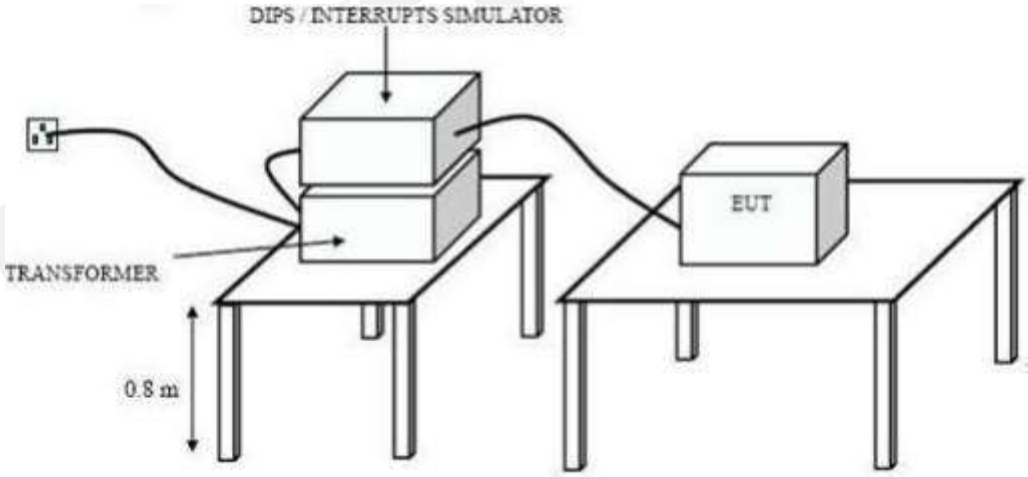

15.2. Test Standard

EN 55035:2017+A11:2020 (EN IEC 61000-4-11:2020)

15.3. Severity Levels and Performance Criterion

15.3.1. Severity Level

Test Level %UT	Voltage dip and short interruptions %UT	Duration (in period)
0	100	250p
40	60	5p
70	30	0.5p

15.3.2. Performance criterion : C & B

15.4. EUT Configuration on Test

The configuration of EUT are listed in Section 5.4.

15.5. Operating Condition of EUT

15.5.1. Setup the EUT as shown in Section 15.1.

15.5.2. Turn on the power of all equipments.

15.5.3. Let the EUT work in test mode (ON) and test it.

15.6.Test Procedure

1) Set up the EUT and test generator as shown on Section 15.1.
2) The interruptions is introduced at selected phase angles with specified duration.
3) Record any degradation of performance.

15.7.Test Result

N/A

Voltage Dips And Interruptions Test Results

Dongguan True Safety Testing Co., Ltd.

Applicant :	*012128*	*Test Date :*	*Feb. 20, 2023*
EUT :	*USB cable*	*Temperature :*	*25 ℃*
M/N :	*JD2534*	*Humidity :*	*53 %*
Power Supply :	*DC 5V*	*Test Mode :*	*ON*

Test Level % U_T	*Voltage Dips & Short Interruptions % U_T*	*Duration (in period)*	*Phase Angle*	*Criterion*	*Result*
0	*100*	*250P*	*0° ~360°*	*C*	*--*
70	*30*	*25P*	*0° ~360°*	*C*	*--*
0	*100*	*0.5P*	*0° ~360°*	*B*	*--*

APPENDIX I

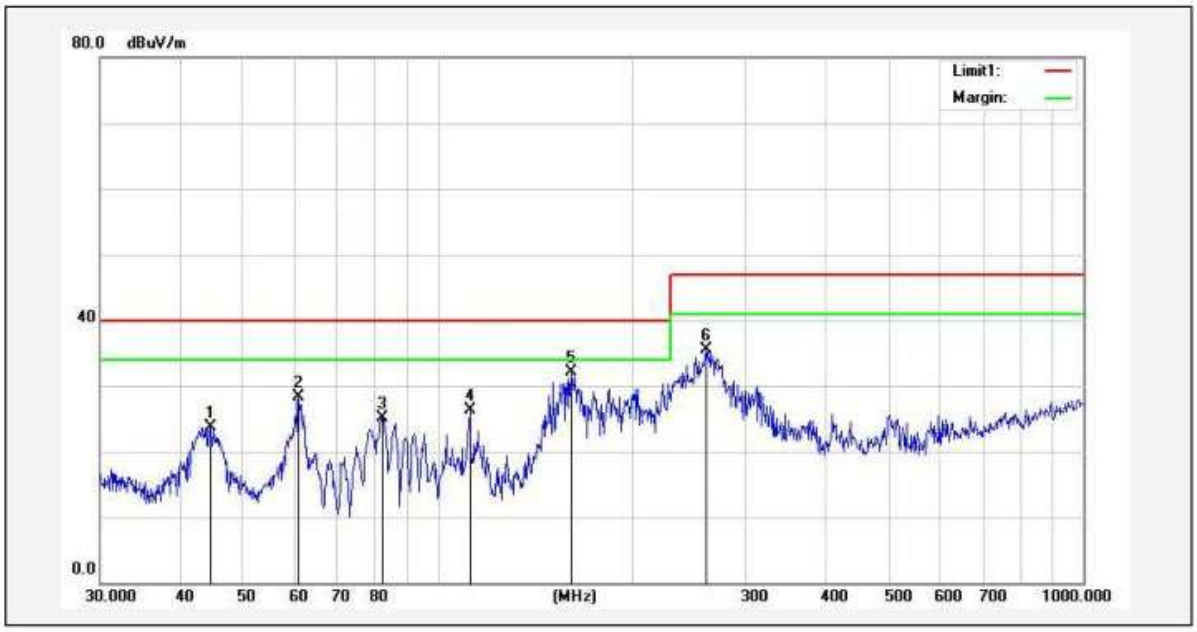

No.	Frequency (MHz)	Reading (dBuV)	Correction (dB/m)	Result (dBuV/m)	Limit (dBuV/m)	Margin (dB)	Degree (deg.)	Height (cm)	Remark
1	44.5868	40.53	-16.80	23.73	40.00	-16.27			peak
2	60.9176	45.58	-17.37	28.21	40.00	-11.79			peak
3	82.0706	46.70	-21.54	25.16	40.00	-14.84			peak
4	112.1305	43.73	-17.50	26.23	40.00	-13.77			peak
5	160.9090	50.70	-18.60	32.10	40.00	-7.90			peak
6	260.1444	50.43	-14.98	35.45	47.00	-11.55			peak

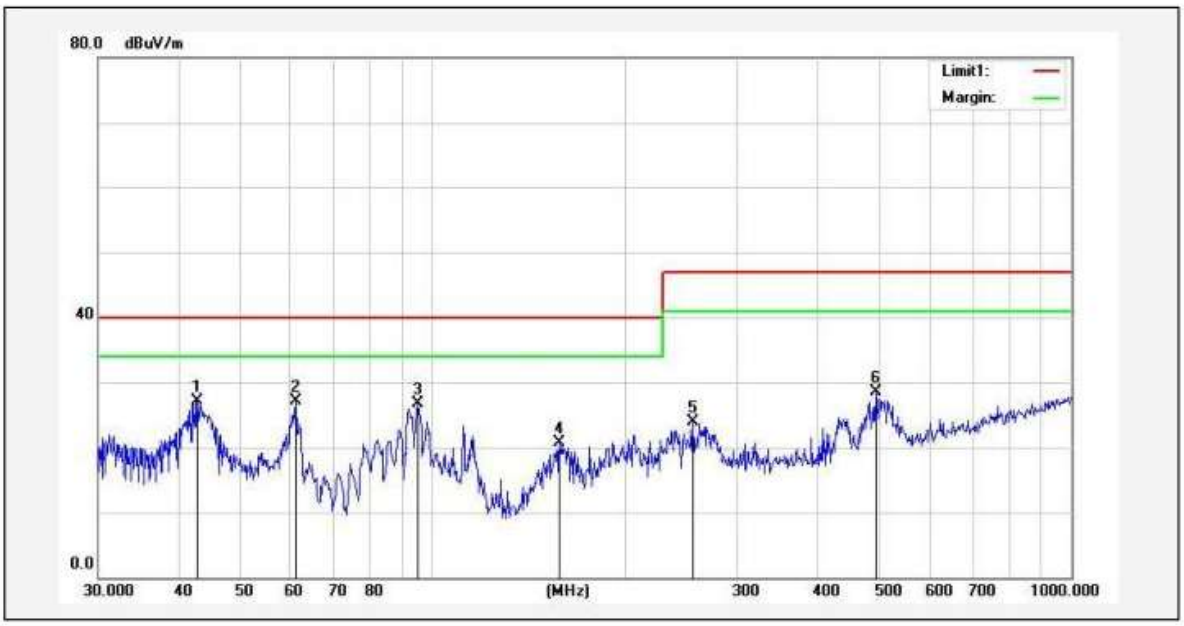

No.	Frequency (MHz)	Reading (dBuV)	Correction (dB/m)	Result (dBuV/m)	Limit (dBuV/m)	Margin (dB)	Degree (deg.)	Height (cm)	Remark
1	42.8998	43.98	-16.96	27.02	40.00	-12.98			peak
2	61.1316	44.56	-17.47	27.09	40.00	-12.91			peak
3	94.7601	45.93	-19.24	26.69	40.00	-13.31			peak
4	158.1123	39.52	-18.80	20.72	40.00	-19.28			peak
5	255.6231	39.04	-15.10	23.94	47.00	-23.06			peak
6	494.1984	38.52	-10.07	28.45	47.00	-18.55			peak

APPENDIX II

Photo 1 General appearance of the EUT

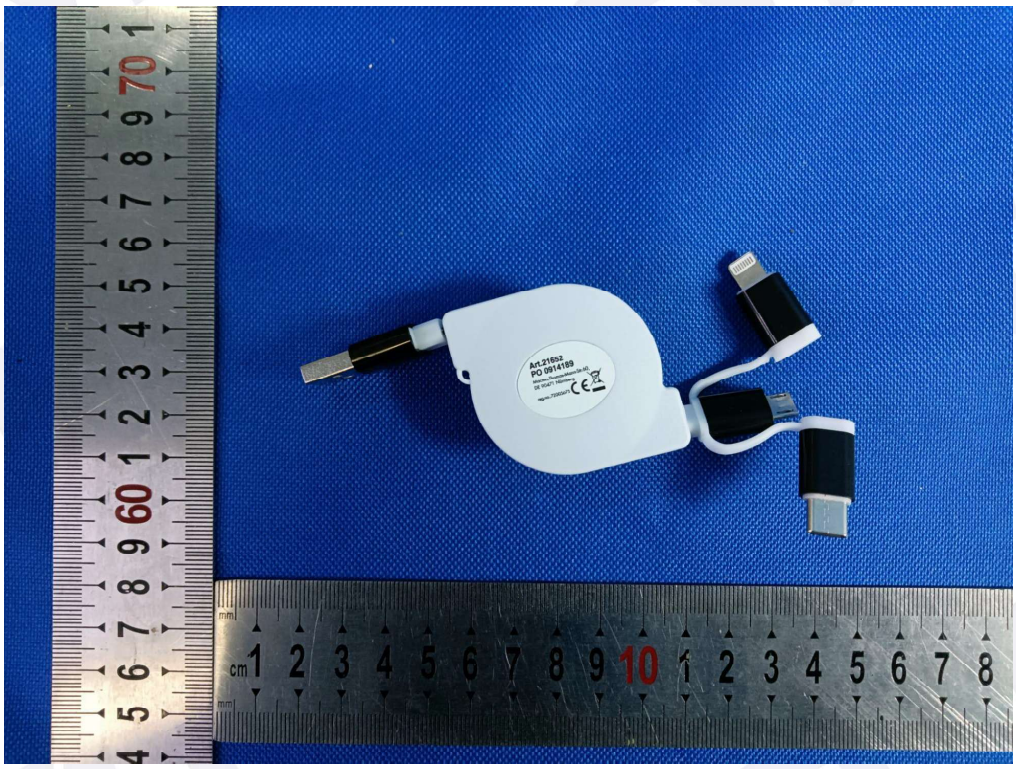

Photo 2 General appearance of the EUT

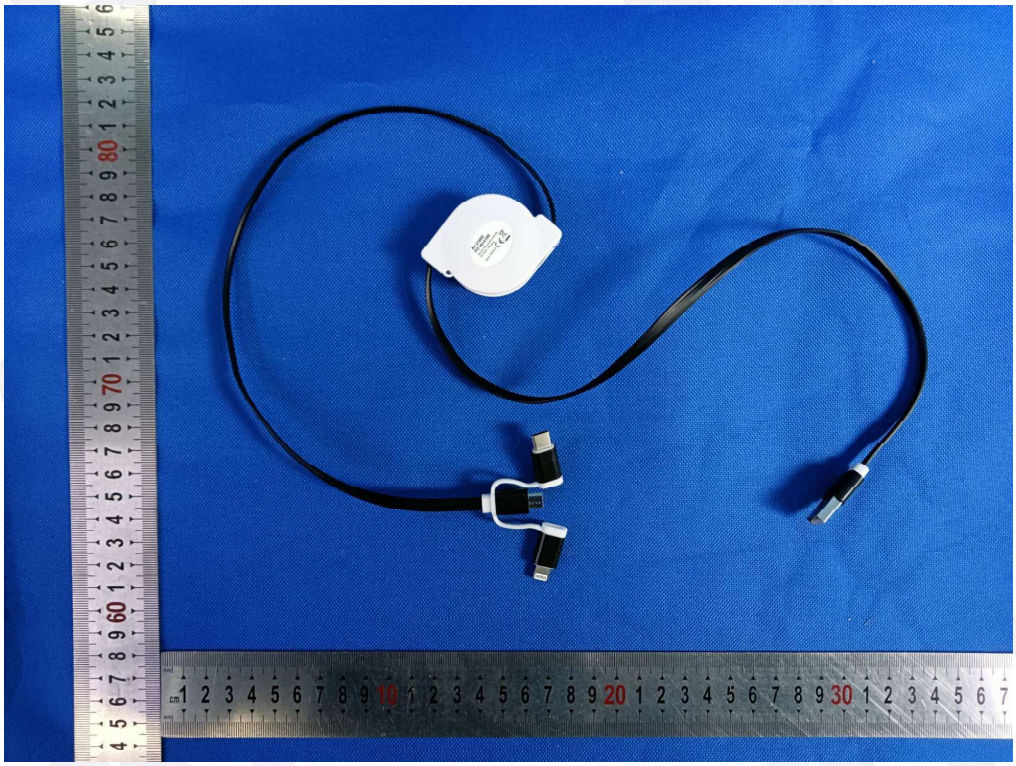

*****End of report*****